RVICE DRG. No.

SHEET No 1 OF 1

CURITY CLASSIFICATION

ED ON

3rd ANGLE PROJECTION

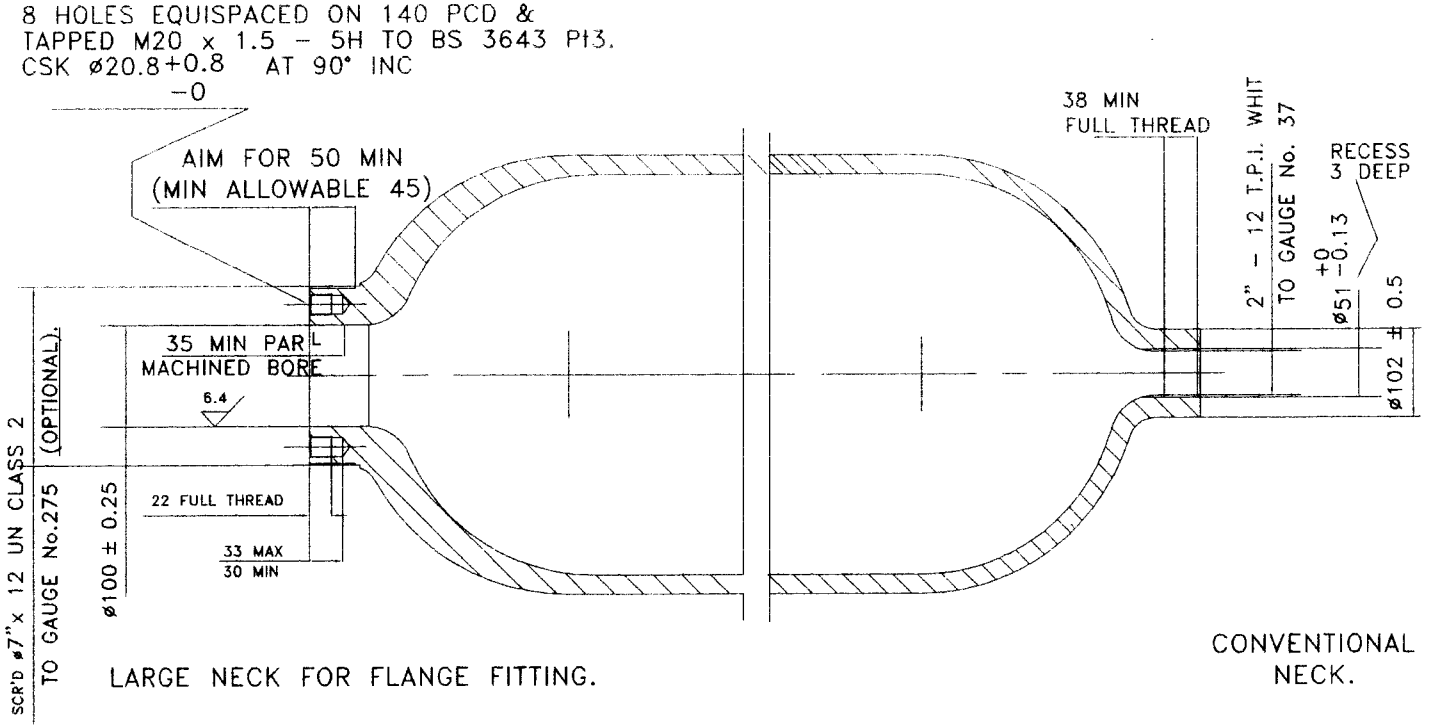

MATERIAL SPECIFICATION	
MATERIAL	– NICKEL CHROME MOLY.
ULT. TENSILE STRENGTH	– 850/1030 N/mm²
YIELD	– 700 N/mm²
ELONGATION	– 13% MIN ON 5.65 $\sqrt{So}$

300 BAR DESIGN PRESSURE (450 BAR TEST PRESSURE)					
APPROX WATER CAPACITY	DIAMETER (mm)	MINIMUM THICKNESS (mm)	LENGTH L (mm)	CYLINDER WEIGHT (KG)	NECK VARIANT.
106 L	434	19.98	1156	270	CONVENTIONAL
106 L	434	19.98	1156	270	FLANGE NECK
258 L	510.5	23.51	1829	545	CONVENTIONAL
258 L	510.5	23.51	1830	545	FLANGE NECK

RT'D						
ECKED						
DRAWN						
ECKED						
AWN Pickles	1	5.9.05.	—			
	ISSUE	DATE	CHANGE No	ISSUE	DATE	CHANGE No

DEF.STAN. 02-317 (NES.317) ISSUE 1.
TYPICAL VESSEL STATISTICS AND FITTING ARRANGEMENTS

FINISH SPECIFICATION

ESTIMATED MASS

SCALE

TOLS

DIMS IN mm

TITLE
TYPICAL FORGED CYLINDER & NECK DETAIL

N.S.N.

CONTRACTOR
CHESTERFIELD SPECIAL CYLINDERS Ltd.

MOD ESTABLISHMENT

RESPONSIBLE AUTHORITY

SECURITY CLASSIFICATION

CONTRACTOR'S DRG. NO

SERVICE DRG NO

SHEET No 1 OF 1